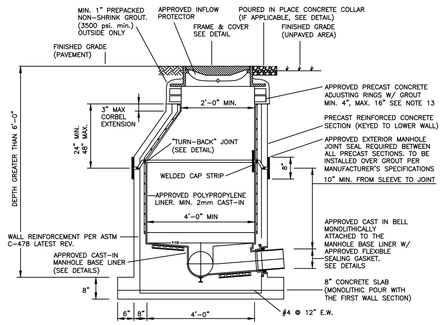

NOTES:

1. PRECAST CONCRETE TYPE II 4000 P.S.I. CALCAREOUS AGGREGATE REQUIRED (MIN. CaCO3 CONTENT: 65% IN LARGE AGGREGATE, 50% IN CONCRETE SCREENING).
2. RUB'R NEK (RU 106) OR APPROVED EQUAL AT ALL RISER JOINTS. SIZES TO BE SPECIFIED ON SHOP DRAWINGS.
3. ALL PIPE OPENINGS SHALL BE GAS TIGHT AND WATER TIGHT WITH NO EXPOSED CONCRETE SURFACES.
4. CAST OPENINGS SHALL BE MANUFACTURED WITH A POLYPROPYLENE SLEEVE CAST IN. APPROVED FLEXIBLE MANHOLE CONNECTORS SHALL BE USED AT PIPE CONNECTIONS. HOLE SIZE PER BOOT MANUFACTURER'S SPECIFICATIONS. DOUBLE PIPE CLAMPS MUST BE INSTALLED ON FLEXIBLE SLEEVES WHERE REQUIRED BY BOOT MANUFACTURER'S INSTALLATION INSTRUCTIONS.
5. CORED PIPE OPENINGS SHALL BE INSTALLED PER DETAIL. APPROVED FLEXIBLE CONNECTOR WILL BE INSTALLED ONTO POLY-PROPYLENE WALL SLEEVE. WALL SLEEVE SHALL BE EPOXIED INTO CORED OPENING AND THERMAL WELDED TO WALL LINER. BY LICENSED CONTRACTOR.
6. FLOW CHANNELS SHALL DIRECT INFLUENT INTO FLOW STREAM. (SEE DETAIL)
7. LIFT HOLES ARE PERMITTED.
8. INSIDE DROPS SHALL NOT BE DESIGNED TO EXCEED 1.80 FEET AND NOT CONSTRUCTED TO EXCEED 2.0 FEET. MAX. 6" INSIDE DROP IS PERMITTED FOR MANHOLES WITH 3 OR MORE INVERTS AND MANHOLES WITH A CHANGE IN FLOW DIRECTION OF MORE THAN 45 DEGREES.
9. MANHOLE FABRICATION SHALL BE IN ACCORDANCE WITH ASTM C-478, LATEST STANDARD.
10. MINIMUM 5 FEET IS REQUIRED BETWEEN OUTSIDE OF MANHOLE AND SERVICE WYE.
11. MANHOLES SHALL BE LINED INSIDE WITH AN APPROVED POLYPROPYLENE LINER SYSTEM. LINERS MUST BE WELDED BY LINER MFG CERTIFIED WELDERS AND BE CAST INTO THE MANHOLE BY A LINER MANUFACTURER CERTIFIED PRECASTER.
12. APPROVED INFLOW PROTECTORS ARE REQUIRED.
13. MAXIMUM HEIGHT OF CHIMNEY SHALL NOT EXCEED 24" (INCLUDING FRAME CASTING).
14. APPROVED THERMO-PLASTIC CHIMNEY LINER SHALL COMPLETELY COVER THE PRECAST CONCRETE GRADE RINGS AND SHALL BE SEALED TO THE CORBEL LINER BY MEANS OF AN APPROVED POLYISOPRENE LIP SEAL GASKET AND SEALED TO THE RING USING APPROVED BUTYL STRIPS. SEE DETAILS.
15. SOLID THERMO-PLASTIC CAST-IN LINER SYSTEM IS REQUIRED FOR LAST MANHOLE PRIOR TO A LIFT STATION, MANHOLES DEEPER THAN 14 FEET, MANHOLES WITH AN OUTSIDE DROP, AND MANHOLES WITH A FORCE MAIN CONNECTION. SEE APPROPRIATE DETAILS.
16. MANHOLES IN ROADWAYS SHALL BE LOCATED OUTSIDE OF WHEEL PATHS.

STANDARD MANHOLE WITH CAST-IN LINER AND BASE LINER 29S

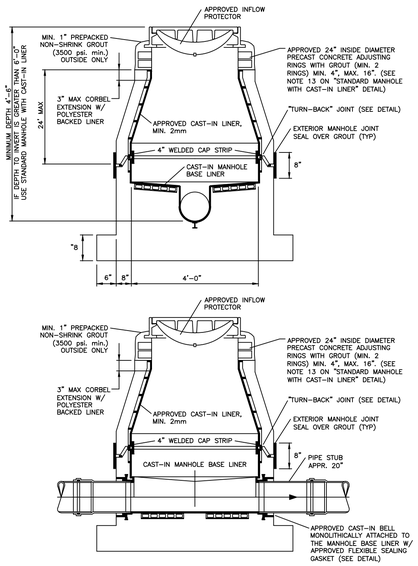

NOTE: ALL CORRESPONDING STANDARD MANHOLE NOTES AND DETAILS SHALL APPLY.

SHALLOW MANHOLE WITH CAST-IN LINER AND BASE LINER 30S

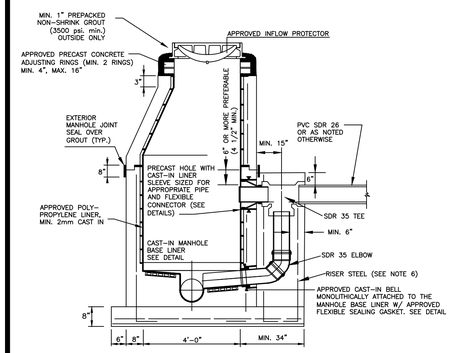

NOTES:

1. ALL DETAILS AND SPECIFICATIONS FOR "STANDARD MANHOLE WITH SOLID POLYPROPYLENE LINER SYSTEM" ARE APPLICABLE EXCEPT FOR REFERENCES TO DROP ASSEMBLY.
2. THE PRECAST BASE SHALL EXTEND FULLY UNDER THE DROP ASSEMBLY.
3. PRECAST DROP ENCASEMENT REQUIRED UP TO TOP EDGE OF 90 DEGREE ELBOW, BRICK AND CONCRETE RUBBLE ARE PERMITTED AS FILLER IN REMAINDER OF DROP ENCASEMENT.
4. DROP CONNECTIONS SHALL BE REQUIRED WHENEVER AN INFLUENT INVERT IS LOCATED 2.0 FEET OR MORE ABOVE THE MAIN INVERT CHANNEL. DROP CONNECTIONS SHOULD NOT BE DESIGNED FOR LESS THAN A 2.4 FOOT DROP.
5. PVC SDR 26 PIPE WITH PVC SDR 35 FITTINGS SHALL BE UTILIZED IN THE DROP ASSEMBLY.
6. DROP ENCASEMENT REINFORCING STEEL TO BE CAST IN PLACE WITH BASE (4 RODS) OR USE 4-1/2" DIA. COIL LOOP INSERTS CAST IN PLACE WITH BASE (TO BE USED WITH 1/2" COIL RODS). COIL LOOP INSERTS TO BE "DAYTON SUPERIOR" B16, 1/2"X 4" OR APPROVED EQUAL.

OUTSIDE DROP MANHOLE WITH CAST-IN LINER AND BASE LINER 31S

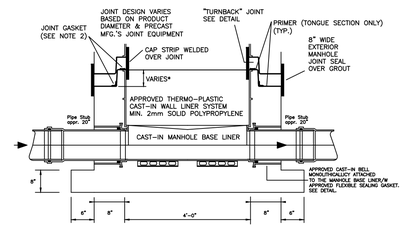

NOTES:

1. LINER WELDING SHALL BE PERFORMED EXCLUSIVELY BY LICENSED, CERTIFIED WELDERS.
2. SHOP DRAWINGS SHALL CALL OUT THE SIZE, TYPE AND POSITIONING OF THE APPROVED JOINT SEALANT.
3. PRIMER TO BE APPLIED BY THE PRECASTER (TONGUE SECTION ONLY).

MANHOLE BASE SECTION 32S

NOTES:

1. APPROVED PLUMBING PLAN MUST BE ON JOB SITE FOR INSPECTION, IF NOT, INSTALLATION WILL BE REJECTED.
2. PLUMBING SHALL CONFORM TO ALL PALM BEACH COUNTY AND OTHER APPLICABLE CODES.
3. ***TEMPORARY CAP IN PLACE (NO SEWAGE). UPSTREAM OF THE VENT PIPE TO BE IN PLACE UNTIL WUD INSPECT AND INSTALL VALVE***
4. EXISTING SEPTIC TANK TO BE ABANDONED IN ACCORDANCE WITH LOCAL HEALTH DEPT. SPECIFICATIONS.
5. AIR INTAKE ASSEMBLY IS REQUIRED.
6. AIR VAC VALVE WILL BE INSTALLED BY UTILITY **AFTER** 4" AIR-INTAKE ASSEMBLY IS IN PLACE.
7. 6. SEWER CONNECTION FEES TO BE PAID PRIOR TO CONNECTION.
8. ***TEMPORARY CAP IN PLACE UNTIL WUD INSPECT AND INSTALL VALVE.***
9. ***CAP IS NOT TO BE REMOVED UNTIL WUD HAS INSTALLED VALVE***

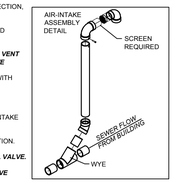

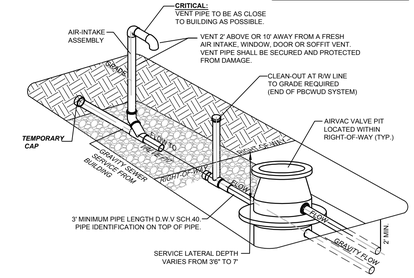

TYPICAL WASTEWATER SERVICE INSTALLATION FOR VACUUM SEWER SYSTEM 82S

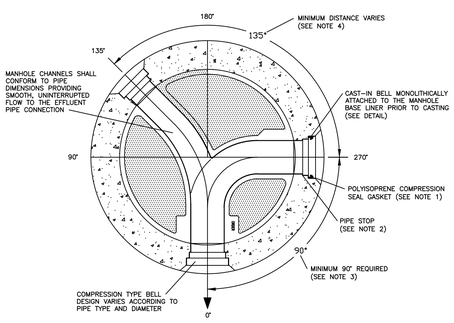

NOTES:

1. ONLY THE POLYISOPRENE GASKET PROVIDED BY THE MANHOLE BASE LINER MANUFACTURER SHALL BE USED IN COMPRESSION TYPE BELLS.
2. CONNECTION PIPES SHALL BE INSERTED COMPLETELY INTO THE BELL CONNECTOR FLUSH WITH THE PIPE STOP PROVIDING A SMOOTH TRANSITION FROM PIPE TO MANHOLE BASE LINER CHANNEL.
3. MINIMUM OF 90 DEGREES BETWEEN INCOMING, LEFT OR RIGHT OF OUTGOING PIPE. DISTANCE BETWEEN CONNECTIONS MAY VARY ACCORDING TO MANHOLE DIAMETER, PIPE SIZE AND TYPE.
4. MINIMUM DISTANCE BETWEEN INFLUENT PIPE CONNECTIONS MAY VARY AND SHALL BE SPECIFIED BY THE LINER MANUFACTURER ACCORDING TO MANHOLE AND/OR PIPE DIAMETER AND TYPE.

FLOW CHANNEL/PIPE CONNECTION TO NEW CAST-IN BASE LINER 33S

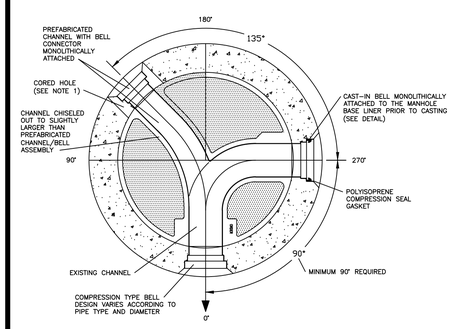

NOTES:

1. CORED OPENING AND CHANNEL DIAMETER PER CHANNEL/BELL MANUFACTURER REQUIREMENTS. SIZES SHALL BE SPECIFIED ON SHOP DRAWING.
2. ONLY AN APPROVED CHANNEL/BELL ASSEMBLY PROVIDED BY THE BASE LINER MANUFACTURER SHALL BE USED.
3. CHANNEL/BELL ASSEMBLY MUST BE COMPLETELY GROUTED IN PLACE USING AN APPROVED CEMENT.
4. UPON "SETTING" OF GROUT, THE NEW CHANNEL/BELL ASSEMBLY MUST BE JOINED TO THE EXISTING MANHOLE BASE LINER BY EITHER THERMO-PLASTIC WELDING OR FRP PATCH AS SPECIFIED BY BASE LINER MANUFACTURER.

FLOW CHANNEL/ PIPE CONNECTION TO EXISTING CAST-IN BASE LINER 34S

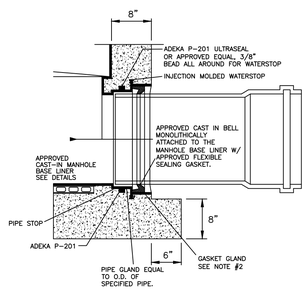

INSTALLATION:

1. CLEAN BELL REMOVING ANY EXCESS CONCRETE SLURRY OR DIRT INSIDE BELL.
2. INSTALL GASKET AS SHOWN.
3. LUBRICATE PIPE SPIGOT AND SLIDE INTO BELL AND GASKET UNTIL REACHING PIPE STOP.
4. CHECK FOR WATERTIGHT CONNECTION. (VACUUM TESTING OR OTHER APPROVED METHOD).

DO NOT LUBRICATE THE GASKET OR THE BELL

NOTES:

1. MANHOLE SHOP DRAWINGS SHALL IDENTIFY THE TYPE OF MANHOLE/PIPE CONNECTION.
2. ONLY THE POLYISOPRENE GASKET SUPPLIED BY THE BELL MANUFACTURER SHALL BE USED IN COMPRESSION TYPE BELLS.
3. BOOT HUB VARIES ACCORDING TO GASKET MANUFACTURER'S SPECIFICATION FOR SPECIFIC PIPE SIZE AND TYPE.
4. MANHOLE SHOP DRAWINGS MUST IDENTIFY THE PIPE SIZE, TYPE, GASKET TYPE AND HOLE SIZE.

PIPE TO MANHOLE CONNECTION DETAIL TYPE "A" (GASKET) 35S

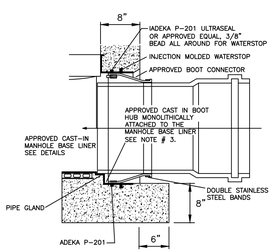

INSTALLATION:

1. CLEAN BOOT HUB REMOVING ANY EXCESS CONCRETE SLURRY OR DIRT INSIDE BELL.
2. INSTALL RUBBER BOOT CONNECTOR (PER MANUFACTURER'S INSTRUCTIONS). WEDGE STYLE EXPANDER BOLTS MUST BE ALIGNED WITH THE "TOP" OF BOOT HUB ACCESS NOTCH.
3. PRE-MITER PIPE END AS REQUIRED TO PREDETERMINED PIPE DEFLECTION ANGLE. MERELY "DE-BURR" PIPE END - DO NOT CHAMFER OR BEVEL PIPE END.
4. LUBRICATE SPIGOT; ORIENT PIPE MITER; SLIDE INTO RUBBER BOOT CONNECTOR; "HOME" PIPE TO BASE LINER CHANNEL END; DEFLECT PIPE AS REQUIRED. INSPECT MANHOLE BASE INTERIOR FOR CHANNEL/PIPE INVERT ALIGNMENT AND SEAL; TIGHTEN RUBBER BOOT CLAMP (PER MANUFACTURER'S INSTRUCTIONS).
1: CHECK FOR WATERTIGHT CONNECTION; (VACUUM TESTING OR OTHER APPROVED METHOD).

DO NOT LUBRICATE THE GASKET OR THE BELL

NOTES:

1. MANHOLE SHOP DRAWINGS SHALL IDENTIFY THE TYPE OF MANHOLE/PIPE CONNECTION.
2. ONLY THE POLYISOPRENE GASKET SUPPLIED BY THE BELL MANUFACTURER SHALL BE USED IN COMPRESSION TYPE BELLS.
3. BOOT HUB VARIES ACCORDING TO GASKET MANUFACTURER'S SPECIFICATION FOR SPECIFIC PIPE SIZE AND TYPE.
4. MANHOLE SHOP DRAWINGS MUST IDENTIFY THE PIPE SIZE, TYPE, GASKET TYPE AND HOLE SIZE.

PIPE TO MANHOLE CONNECTION TYPE "B" (BOOT) 36S

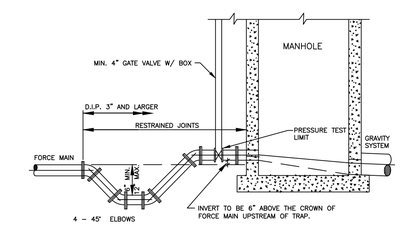

NOTES:

1. FORCE MAIN TO ENTER MANHOLE AS CLOSE AS POSSIBLE TO 180° TO GRAVITY OUTLET.
2. THE INVERT LEVEL OF FORCE MAIN AT POINT OF ENTRY SHALL BE 6" ABOVE OUTFLOW INVERT OF MANHOLE.
3. CORE ENTRY ONLY INTO EXISTING MANHOLES.
4. TRAP TO BE LOCATED PRIOR TO DROP INTO MANHOLE AND OUTSIDE OF PAVED AREAS.
5. USE TWO 45° ELBOWS PAST TRAP IF ELEVATION DROP IS REQUIRED TO ENTER MANHOLE.
6. CAST-IN OR FIELD INSTALLED FLOW CHANNEL IS REQUIRED.
7. MANHOLE WALL TO BE COATED WITH AN APPROVED SOLID THERMOPLASTIC CAST-IN CORROSION BARRIER SYSTEM.
8. TRAP JOINTS TO BE RESTRAINED.

FORCE MAIN ENTERING MANHOLE 43S

WASTEWATER #4
STANDARD DETAILS

CONSULTANT:

DESIGNED BY: WUD
DRAWN BY: M. BUCKNER
CHECKED BY: J. LAMMERT
APPROVED BY: WUD

Palm Beach County
Water Utilities Department
P.O.Box 16097
West Palm Beach, FL 33416-6097

Jul 30, 2019

PROJECT NO.
00-000

PROJECT NAME

PALM BEACH COUNTY
WATER UTILITIES DEPARTMENT
P.O. BOX 16097
WEST PALM BEACH, FL 33416
(561)493-6000

NO.	DATE	REVISION / REMARKS	BY
	JUNE 2019	GENERAL REVISION	J.L.

STD DETAILS

SHEET NUMBER
0
OF
0

SEAL